# SKINTOP® KR-M ATEX plus blue

SKINTOP® KR-M ATEX plus blue, metric plastic cable gland with high degree of protection and reducing seal insert, explosion-proof



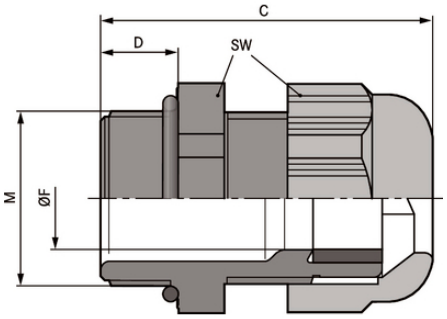


Oil & Gas

Mechanical resistance

Optimum strain relief

Reliability

Variety of approval certifications

## Benefits

High degree of protection
Cold impact resistance
High strain relief
Wide, variable clamping ranges
Permanent vibration protection

## Application range

With reducing seal insert, to seal cables with smaller outer diameters

## Product Make-up

Metric connection thread acc. to DIN EN 60423
Basis for technical information DIN IEC 62444

## Technical Data

Last Update (15.05.2025)
©2025 Lapp Group - Technical changes reserved
Product Management www.lappkabel.de
You can find the current technical data in the corresponding data sheet.
PN 0456 / 02_03.16

# SKINTOP® KR-M ATEX plus blue

| | |
|---|---|
| Classification ETIM 5: | ETIM 5.0 Class-ID: EC000441<br>ETIM 5.0 Class-Description: Cable screw gland |
| Classification ETIM 6: | ETIM 6.0 Class-ID: EC000441<br>ETIM 6.0 Class-Description: Cable screw gland |
| Caution: | Refer to the instruction leaflet for the installation dimensions and torques |
| Certifications: | CE 0637 Ex II 2G<br>Ex eb IIC Ex II 1D<br>Ex ta IIIC<br>IECEx IBE 13.0027X |
| Colour delivered: | Blue (RAL 5015) |
| Material: | Body: special polyamide<br>Seal: special elastomer<br>O-ring: NBR |
| Tests: | DIN EN 60079-0<br>DIN EN 60079-7<br>DIN EN 60079-31 |
| Protection rating: | IP 68 - 10 bar |
| Temperature range: | -20 °C to +80 °C |

**Note**

Photographs and graphics are not to scale and do not represent detailed images of the respective products.
Prices are net prices without VAT and surcharges. Sale to business customers only.


©2025 Lapp Group - Technical changes reserved

LAPP

PRODUCT INFORMATION

# SKINTOP® KR-M ATEX plus blue

| Article number | Article designation / size | Clamping range ØF mm | Thread M | SW wrench size mm | Overall length C mm | Thread length D mm | Pieces / PU |
|---|---|---|---|---|---|---|---|
| SKINTOP® KR-M ATEX plus blue | | | | | | | |
| 54115405 | KR-M 12 ATEX plus blue | 2 - 4 | 12 x 1.5 | 15 | 30 | 8 | 50 |
| 54115415 | KR-M 16 ATEX plus blue | 4 - 6 | 16 x 1.5 | 19 | 34 | 8 | 50 |
| 54115425 | KR-M 20 ATEX plus blue | 5 - 10 | 20 x 1.5 | 25 | 38 | 9 | 50 |
| 54115435 | KR-M 25 ATEX plus blue | 6 - 13 | 25 x 1.5 | 30 | 40 | 10 | 25 |
| 54115445 | KR-M 32 ATEX plus blue | 9 - 15 | 32 x 1.5 | 36 | 47 | 10 | 25 |
| 54115455 | KR-M 40 ATEX plus blue | 16 - 23 | 40 x 1.5 | 46 | 52 | 10 | 10 |
| 54115465 | KR-M 50 ATEX plus blue | 22 - 29 | 50 x 1.5 | 55 | 62 | 12 | 5 |
| 54115475 | KR-M 63 ATEX plus blue | 29 - 39 | 63 x 1.5 | 66 | 71 | 12 | 5 |

Last Update (15.05.2025)
©2025 Lapp Group - Technical changes reserved
Product Management www.lappkabel.de
You can find the current technical data in the corresponding data sheet.
PN 0456 / 02_03.16